Quick Start Guide

NXD/T-CV10 10"Modero Widescreen Video Touch Panels

For more detailed installation, configuration, programming, file transfer, and operating instructions, refer to the *NXD-CV10/NXT-CV10* Instruction Manual, available on-line at www.amx.com.

FIG. 1 10" Modero Widescreen Video Touch Panels

ATTENTION!

Verify you are using the latest NetLinx Master and Modero touch panel firmware *(available from www.amx.com)*. Verify the TPDesign4 program being used is **Version 2.6** or higher.

Overview

These are the first 10" diagonal Widescreen Color Active video-capable touch panels in the control and automation industry.

These Color Video (CV) panels display NTSC/PAL/SECAM video formats within variable sized windows. They include a built-in microphone, speakers, audio/headphone connector, and six NetLinx programmable pushbuttons (only available on CV10 models with the button feature available (**-02K** and **-03K**)).

Table Top models use AMX's exclusive SmoothTilt™ technology for effortless adjustment of the viewing angle.

Each panel is sold only as part of a CV10 Kit which includes both a panel and an NXA-AVB/ETHERNET Audio/Video Breakout Box (**FG2254-10**).

The the three available Kit configurations are:

- NXD-CV10 (**FG2259-02K**) - 10" Wall Mount Kit (with buttons)
  (includes an NXD panel and NXA-AVB/ETHERNET Breakout Box).
- NXT-CV10 (**FG2259-01K**) - 10" Table Top Kit (without buttons)
  (includes both an NXT panel and an NXA-AVB/ETHERNET Breakout Box).
- NXT-CV10/PB (**FG2259-03K**) - 10" Table Top Kit (with buttons)
  (includes both an NXT panel and NXA-AVB/ETHERNET Breakout Box).

Specifications

CV10 Specifications	
Dimensions (HWD): NXA-RK10 (**FG2904-54**) NXD-CV10 (**FG2259-02**) NXT-CV10 (**FG2259-01/03**) CB-TP10 (**FG036-10**)	• 5 RU (rack units) high (22.15 cm) 8.72" x 19.0" x 0.50" (22.15 cm x 48.26 cm x 1.27 cm) • Faceplate included: 7.96" x 11.16" x 3.32" (20.22 cm x 28.34 cm x 8.43 cm) • Fully raised: 8.71" x 11.16" x 7.38" (22.12 cm x 28.34 cm x 18.75 cm) Fully lowered height: 4.53" (11.51 cm) • Conduit/wallbox: 5.47" x 7.23" x 3.40" (13.90 cm x 18.40 cm x 8.64 cm) (***optional***)
Power Requirements (stand-alone CV10):	• Constant current draw: 1.2 A @ 12 VDC (stand-alone) • Startup current draw: 1.8 A @ 12 VDC (stand-alone)
Power Requirements (CV10 and BASE/1):	• Constant current draw: 2.6 A @ 12 VDC • Startup current draw: 3.9 A @ 12 VDC
Minimum power supply required:	• PSN2.8 Power Supply (**FG423-17**) - when used with a stand-alone CV10 unit. • PSN4.4 Power Supply (**FG423-45**) - when a CV10 is connected to a BASE/1.
Memory:	• 64 MB SDRAM • 64 MB Compact Flash (upgradable to 1 GB - factory programmed)
Weight:	• NXD-CV10: 2.65 lbs (1.20 kg) • NXT-CV10: 4.75 lbs (2.15 kg)
Certifications:	• FCC Part 15 Class B, CE, and IEC 60950
Panel LCD Parameters:	• Aspect ratio: 16 x 9 • Brightness (luminance): 350 cd/m2 • Channel transparency: 8-bit Alpha blending • Contrast ratio: 250:1 • Display colors: 256 thousand colors (18-bit color depth) • Dot/pixel pitch: 0.28 mm • Panel type: TFT Color Active-Matrix • Screen Resolution: 800 x 480 pixels (HV) @ 60 Hz frame frequency • Video format: NTSC, PAL, and SECAM
Viewing Angle:	• 95° total viewing angle • Vertical: + 45° (up from center) and -65° (down from center)
IR Reception Angle:	• Horizontal: ± 50° (left and right from center) • Vertical: ± 30° (up and down from center)

CV10 Specifications (Cont.)	
Supported Audio Sample Rates:	• 48000Hz, 44100Hz, 32000Hz, 24000Hz, 22050Hz, 16000Hz, 12000Hz, 11025Hz, and 8000Hz.
Front Panel:	• Light Sensor: Photosensitive light detector for automatic adjustment of the panel brightness • Motion Sensor (PIR): Proximity Infrared Detector to wake the panel when panel is approached • IR Receiver: 38 KHz and 455 KHz AMX IR frequencies • Sleep Button: Pushbutton (grey) provides both access to the Setup and Calibration page and toggles the panel between a "sleep" or "wake" state • Microphone: Used for intercom applications (***requires the NXA-AVB/ETHERNET Breakout Box for analog communication***) • Speakers: Stereo output with a frequency response of 500 Hz - 7 KHz • LEDs: 6 blue LEDs (support On and Off). - ***Both the LEDs and pushbuttons are not available with the NXT-CV10 panel (FG2259-01) containing no buttons.*** • 6 programmable pushbuttons
Rear Connectors:	• Mini-USB Connector: 5-pin Mini-USB connector used for programming, firmware update, and touch panel file transfer between the PC and the target panel • Stereo Output Connector: Stereo output through a 3.5mm mini-jack (for use with external speakers or headphones) • Ethernet 10/100 Port: RJ-45 port for 10/100 Mbps communication • USB Connector: Type A USB port connects an external keyboard or mouse device for use with Virtual PC applications • Audio/Video Connector: RJ-45 connection for A/V signals (via CAT5) between the NXA-AVB/ETHERNET Breakout Box and the panel • Power: 2-pin 3.5 mm mini-Phoenix connector
Operating /Storage Environments:	• Operating Temperature: 0° C (32° F) to 40° C (104° F) • Operating Humidity: 20% - 85% RH • Storage Temperature: -20° C (-4° F) to 60° C (140° F) • Storage Humidity: 5% - 85% RH
Included Accessories:	• Installation Kit for 10" NXD panels (KA2259-02): - 2-pin 3.5 mm mini-Phoenix connector (41-5025) - Three Drywall clips (62-5924-05) and #6 - sheet metal screws (80-0192) - Four Phillips-head screws (#4-40 x 0.250 Black) (80-0112) • Installation Kit for 10" NXT panels (KA2259-01): - 2-pin 3.5 mm mini-Phoenix connector (41-5025) - One CAT5 Table Top Suppression Ferrite (04-0014) - One cylindrical CAT5 USB Mouse Suppression Ferrite (04-0018-SA) • Modero Table Top Cable (CA2250-50) provided with all NXT panels • NXA-AVB/ETHERNET Breakout Box (**FG2254-10**) - Provides video/audio distribution to the A/V panel over CAT5 cable (up to 200'/60.96 m) and accepts either Composite or S-Video • Trim Ring with button openings (60-2259-05) *(factory installed on -02 and -03 panel models only)* • Trim Ring without button openings (60-2259-04) *(NXD models only)*
Other AMX Equipment:	• CB-TP10 Conduit/Wallbox (**FG036-10**) • CC-USB (Type A) to Mini-B 5-Wire programming cable (**FG10-5965**) • NXA-BASE/1 Battery Base Kit (**FG2255-05K**): - battery base and single NXT-BP battery • NXA-RK10 Rackmount Kit for 10" Wall Mount panels (**FG2904-54**) • NXA-WC80211GCF, 802.11g Compact Flash Wireless Card Upgrade Kit provides wireless Ethernet support (**FG2255-07**) • NXT-BP Battery (**FG2255-10**) • NXT-CHG Kit (**FG2250-50K**): single charger and 2 NXT-BP batteries • PSN2.8 Power Supply (12 VDC) (**FG423-17**) • PSN4.4 Power Supply (12 VDC) (**FG423-45**) • Upgrade Compact Flash (factory programmed with firmware): NXA-CV10CF128M - 128 MB Compact Flash card (**FG2116-65**) NXA-CV10CF256M - 256 MB Compact Flash card (**FG2116-66**) NXA-CV10CF512M - 512 MB Compact Flash card (**FG2116-67**) NXA-CV10CF1G - 1 GB Compact Flash card (**FG2116-68**)

Panel Connectors

FIG. 2 shows the connectors located on the CV10 Modero Video panels. The Audio/Video RJ-45 connector provides differential audio/video signals between the touch panel and the NXA-AVB/ETHERNET. This connector routes Composite video, Stereo (left/right) audio, and microphone audio.

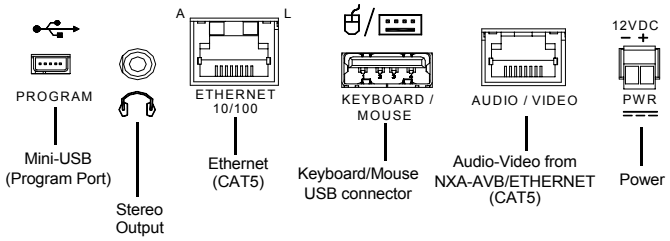

FIG. 2 Connector layout on the CV10 Touch Panels

NXA-AVB/ETHERNET Breakout Box

FIG. 3 shows the front and rear connectors on the NXA-AVB/ETHERNET breakout box. This breakout box can be mounted on either a horizontal flat surface or in an equipment rack (by removing the front faceplate and securing it to an optional AC-RK Rack Kit).

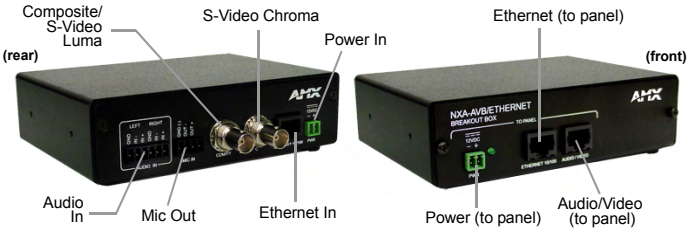

FIG. 3 Connector layouts on the NXA-AVB/ETHERNET Breakout Box

Wiring the NXA-AVB/ETHERNET Connectors and Cables

The inputs and outputs on the breakout box are separated into front and rear connectors. The rear connectors are used to input external signals. The front connectors are used to communicate signals between the NXA-AVB/ETHERNET and a target Modero panel. FIG. 4 provides a layout of the wiring connection both into and from the breakout box.

Power should be applied to the NXA-AVB/ETHERNET only after all connections have been secured onto both the box and target panel.

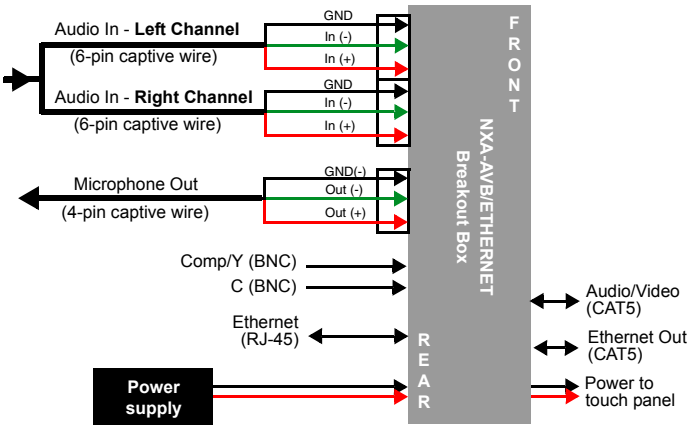

FIG. 4 NXA-AVB/ETHERNET Breakout Box connector wiring diagram

Use a standard CAT5 Ethernet cable (connected to the rear of the Table Top Panel or to the side of the Wall Panel) to provide both communication and 10/100 network connectivity between the panel, breakout box, NetLinx Master, and the network. The rear-panel wiring connections are described below (from left to right):

AUDIO IN: 6-pin mini-Phoenix connector, divided into left and right audio channels. Each channel is divided into GND, IN+, and IN- terminal cable connectors (2 sets of 3 for each channel).

MIC OUT: 4-pin mini-Phoenix connector, divided into GND, OUT-, and OUT+ terminal connectors.

Video In BNCs: Feeds either Composite/S-Video Luma or S-Video Chroma signals into the NXA-AVB/ETHERNET. This feed is then redirected out to a Modero panel through the front Audio/Video CAT5 port.

ETHERNET: RJ-45 connector routes data to the G4 touch panel through the front Ethernet port. These connections use a standard CAT5 Ethernet cable to provide communication between the target touch panel, Breakout Box, and NetLinx Master.

PWR: 2-pin mini-Phoenix connector that connects to a PSN power supply. This port can be used to provide power to a Modero panel by sending it through the NXA-AVB/ETHERNET (rear power connector through to the front power connector).

Wiring for Unbalanced Audio

Use FIG. 5 to configure an unbalanced audio connection.

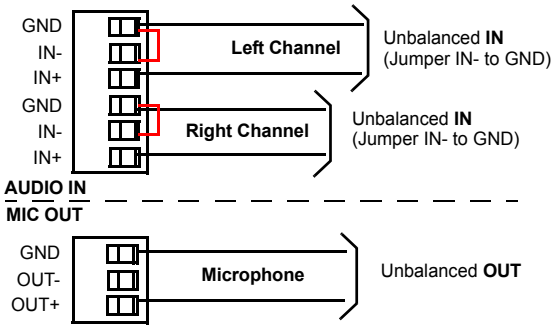

FIG. 5 Wiring the rear AUDIO IN and MIC OUT for use with Unbalanced Audio

Wiring for Balanced Audio

Use FIG. 6 to configure a balanced audio connection.

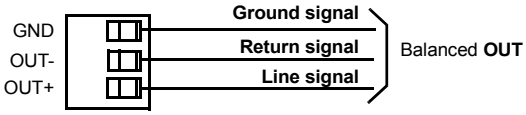

FIG. 6 Wiring the rear AUDIO IN and MIC OUT for use with Balanced Audio

Modero Setup and System Connection

1. Carefully remove the panel from the shipping box, peel the protective plastic cover from the LCD and apply power to the panel.
2. From below the LCD, press the grey Front Setup Access button for 6 seconds (passing-over the Setup page) to access the Calibration setup page and follow the on-screen instructions.
3. Press the on-screen **Protected Setup** button on the Setup page.
4. Enter the panel password into the keypad (default is ***1988)***.
5. Press the *Device Number* field to open the on-screen Device Number keypad and enter a value for the panel (*default is* ***10001***).
6. Press **Done** when finished and press the on-screen **Reboot** button to cycle power to the panel.
7. Press the grey Firmware Setup Access button for 3 seconds to open the Setup page and touch the on-screen **Protected Setup** button.
8. Repeat step 4 to continue to the Protected Setup page.
9. Press the **System Settings** button to open the System Settings page (FIG. 7).

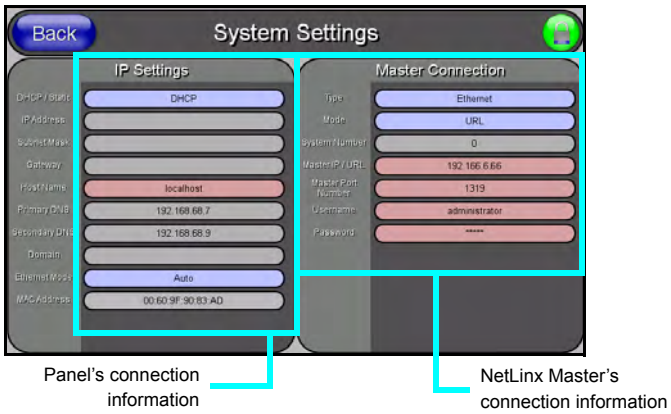

FIG. 7 Sample System Settings page

10. Toggle the *DHCP Static* field to **DHCP**.
11. Toggle the *Type* field to **Ethernet**.
12. Toggle the *Mode* field to **URL**.
13. Enter both the System Number and IP Address of the target Master.
14. Enter a valid Username and/or Password if the target Master is secured.
15. Press the **Back** button and then press the on-screen **Reboot** button to save any changes and cycle power.

©2007 AMX. All rights reserved. AMX and the AMX logo are registered trademarks of AMX.
AMX reserves the right to alter specifications without notice at any time.
3000 RESEARCH DRIVE, RICHARDSON, TX 75082 • 800.222.0193 • fax 469.624.7153 • technical support 800.932.6993 • www.amx.com