TeamBoard Total Mobile

TeamBoard goes mobile

TeamBoard Total Mobile™ brings the interactivity of TeamBoard RT[1] to almost any environment. TeamBoard Total Mobile, the world's best-designed mobile interactive whiteboard stand, allows you to integrate your TeamBoard and projector into one mobile, adjustable unit. Turn any space into an interactive learning space quickly with TeamBoard Total Mobile. And best of all, no tools or technical expertise are required to adjust the height or the location–just press a button to drop the height, and roll through any standard-size doorway–Easy does it!

With the Total Mobile, TeamBoard moves in three dimensions

Improved Accessibility

TeamBoard Total Mobile stand offers the presenter a full 26" (67cm) of height adjustment through just the touch of a finger. It adjusts quickly and smoothly to any height within its range. With finger touch operation and low noise level, the presenter can adjust the height without disrupting the flow of the interactive presentation, so you can adjust on-the-fly.

The height range improves accessibility of TeamBoard for users of all stature, and it's A.D.A. compliant too.

Touchboards
205 Westwood Ave, Long Branch, NJ 07740
Phone: 866-94 BOARDS (26273) / (732)-222-1511
Fax: (732)-222-7088 | E-mail: sales@touchboards.com

Position TeamBoard anywhere in the room

Adjust the viewing angle a full 360° by simply pivoting the unit–the board, projector and laptop move with it, and stay calibrated!

Share TeamBoard across classrooms easily

Moving TeamBoard Total Mobile closer or further from an audience is a snap, with its large casters that permit easy rolling. The casters are also 'total lock' to prevent unwanted rolling and pivoting. Drop to the lowest setting and roll through a standard size doorway, your TeamBoard is now easy to relocate–ideal for shared-technology environments.

[1] TeamBoard Total Mobile is designed for use with TeamBoard RT 77" 4:3 and RT 85" 16:10 only. Other sizes will not fit.

TEAM BOARD

easy does it.®

TeamBoard Total Mobile

TMSMTMSABL
TMSMTMSABL-BD1

Also Available
TeamBoard Mobile Stand
TeamBoard Total Wallmount

Software Bundles

Bundle for Business

Bundle for Education

Please also visit
www.teamboard.com/library

Features	Benefits
✔ Height Adjustable	> 26.5″ (67cm) of vertical travel to accommodate presenters of all heights > At lower heights TeamBoard Total Mobile is accessible for those in early grades or wheelchairs
✔ Substantial Lockable Casters	> Easy movement from room to room with minimal rolling resistance > Change locations or heights easily without technical assistance > Casters are 'total lock'–for rock steady both rolling and swivel performance > Fits through standard doorway when projector is in lowest position
✔ Push-button Controls	> Finger touch electronic height adjustment > It's infinitely adjustable–choose any height within the range without compromise
✔ Quiet Operation	> Low and uniform noise level means zero interruption height adjustment > Easy to maintain normal speaking voice while adjusting height
✔ Adjusts Quickly	> Height adjustment speed of 1.7″/second (43mm/sec)–can be raised to full height from minimum in only 45 seconds
✔ Maximum Height 8′ 10″	> TeamBoard Total Mobile Stand has a trip switch – if you have a low clearance ceiling, and overextend the tower, the trip switch will cut the power until reset > At its uppermost position, with the projector installed, overall height is 8′ 10″ (2.7m)
✔ Minimum Height 6′ 7″	> In its lowest position, with projector installed, overall clearance of 6′ 7″ (2m) is all that's required

TEAM BOARD

easy does it.®

- Easy to use
- Infinitely adjustable within its range
- Move it anywhere you need it
- Fits through standard doorway

Design Intent

The TeamBoard Total Mobile maintains calibration even while being rolled from room to room. Rugged construction featuring finger touch height adjustability.

Operating Specifications

Functionalities	Mobility–can easily be rolled room to room Finger touch height adjustability Projector integration Stable, robust construction
Certifications & Compliances	EN 60335-1, UL962, A.D.A. The management systems governing the design and manufacture of this product are ISO9001:2008 and ISO14001:2001 certified
Projector Compatibility	Sanyo Ultra-Short-Throw projectors (sold separately or bundled, please specify)
Power Requirements	110V or 230V–please specify for your country
Duty Cycle	10%, or 6 minutes/hour
Warranty	1-year mechanical and 5-year limited warranty

Dimensional Details

Overall width	Stand only	33″ (0.8m)
	Stand w/laptop arm	49″ (1.3m)
	Max; TeamBoard RT 77″ 4:3	73 1/8″ (1.9m)
	Min; (laptop positioned behind board) (laptop rotated out)	 62 5/8″ (1.6m) 73 1/8″ (1.9m)
Overall height	Max; no projector Max; with projector	8′ 6 5/8″ (2.6m) 8′ 9 1/2″ (2.7m)
	Min; no projector Min; with projector	6′ 4 1/8″ (1.93m) 6′ 7″ (2m)
Overall depth	Without projector	28″ (0.7m)
	With Sanyo projector	~ 35″ varies
Net Weight	Without projector	124 lbs. (56kg)
	Sanyo projector only	16.7 lbs. (7.6kg)
Operating Environment	41º F to 104ºF (+5ºC to +40ºC)	

No Hassle:

If you have any problems, pick up the phone and let us know. We expect, and need, our customers to be delighted with our products and services.

Shipping

Stand only	Dimensions	36″ x 48″ x 6″ (92cm x 122cm x 15cm)
	Gross Shipping Weight	130 lbs. (59kg)

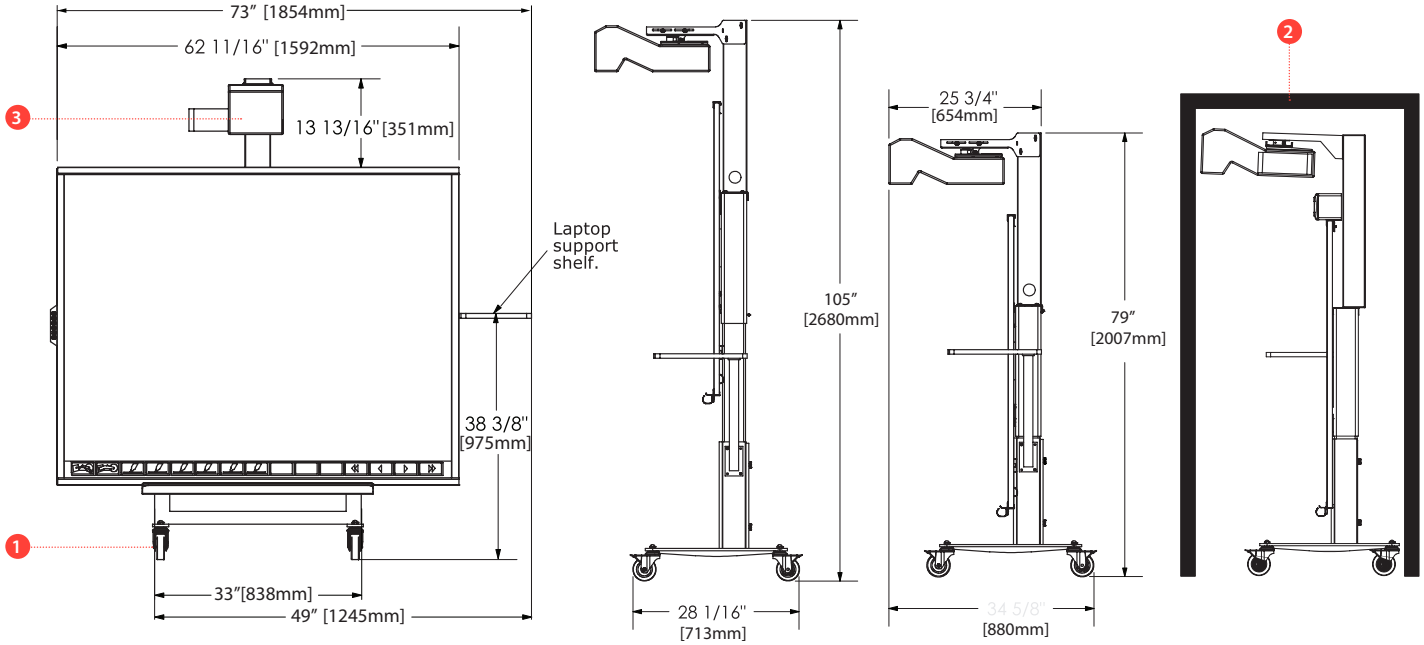

* Projector dimensions are subject to change. The illustrations shown reflect an Sanyo XL51 not the Sanyo DWL2500 which is the current shipping model

1 **Mobile**–large 'total lock' casters means easy rolling from room-to-room and placement or pivoting inside a room, without unwanted movement

2 **Finger touch height adjustment** with 26.5" range means improved accessibility and permits rolling through a standard doorway

3 **Integrated projector**–means less shadowing, the presenter is out of the glare and projector-board calibration is maintained when adjusting height and/or location

What's in the box...

TeamBoard Total Mobile Stand ships with:

- Your new stand, knocked down (dealer assembled)
- Allen key hex tool
- Instruction sheet
- Safety brackets
- Laptop arm and tray
- Mounting hardware to install TeamBoard RT

* One 9/16" open-end wrench (required for initial assembly only) not included

TeamBoard Total Mobile Bundle ships with:

- TeamBoard Total Mobile Stand
- Sanyo DWL 2500 Ultra Short Throw projector

Touchboards
205 Westwood Ave, Long Branch, NJ 07740
Phone: 866-94 BOARDS (26273) / (732)-222-1511
Fax: (732)-222-7088 | E-mail: sales@touchboards.com

Designed and manufactured in North America by **Egan & TeamBoard**, leaders in the Interactive Whiteboard marketplace for 15 years. TeamBoard is part of the Egan Visual family, designers and manufacturers of visual communication products for over 40 years. You can count on TeamBoard products to be well-designed and well-built for years of hassle-free enjoyment.

Environmentally responsible design, quality, cost and timeliness. Egan TeamBoard Inc. has been certified by UL™ to have established, documented, implemented and maintain a Quality Management System as well as an Environmental Management System, and is registered to the ISO9001:2008 and ISO14001:2004 standards.

Egan TeamBoard, Inc.
International
Tel +1-905-851-2826
Fax +1-905-851-3426

Egan TeamBoard, Inc.
US Eastern / Central States & Canada
Tel +1-905-851-2826 1-800-263-2387
Fax 1-888-609-8886

Egan TeamBoard, Inc.
US Mountain and Western States
Tel +1-323-720-1336 1-800-826-1778
Fax 1-800-726-1314

www.egan.com
www.teamboard.com
sales@teamboard.com
support@teamboard.com

This document is printed on certified paper product.

Mixed Sources
Product group from well-managed forests and other controlled sources
www.fsc.org Cert no.XX-COC-XXXX
© 1996 Forest Stewardship Council

0248706_R2 11-07:PDF © Egan TeamBoard Inc., 2011 Printed in Canada 10431 All rights reserved. All other product names are trademarks of their respective owners. Specifications are nominal and believed to be accurate at the time of publication. All information contained herein is subject to change without notice.